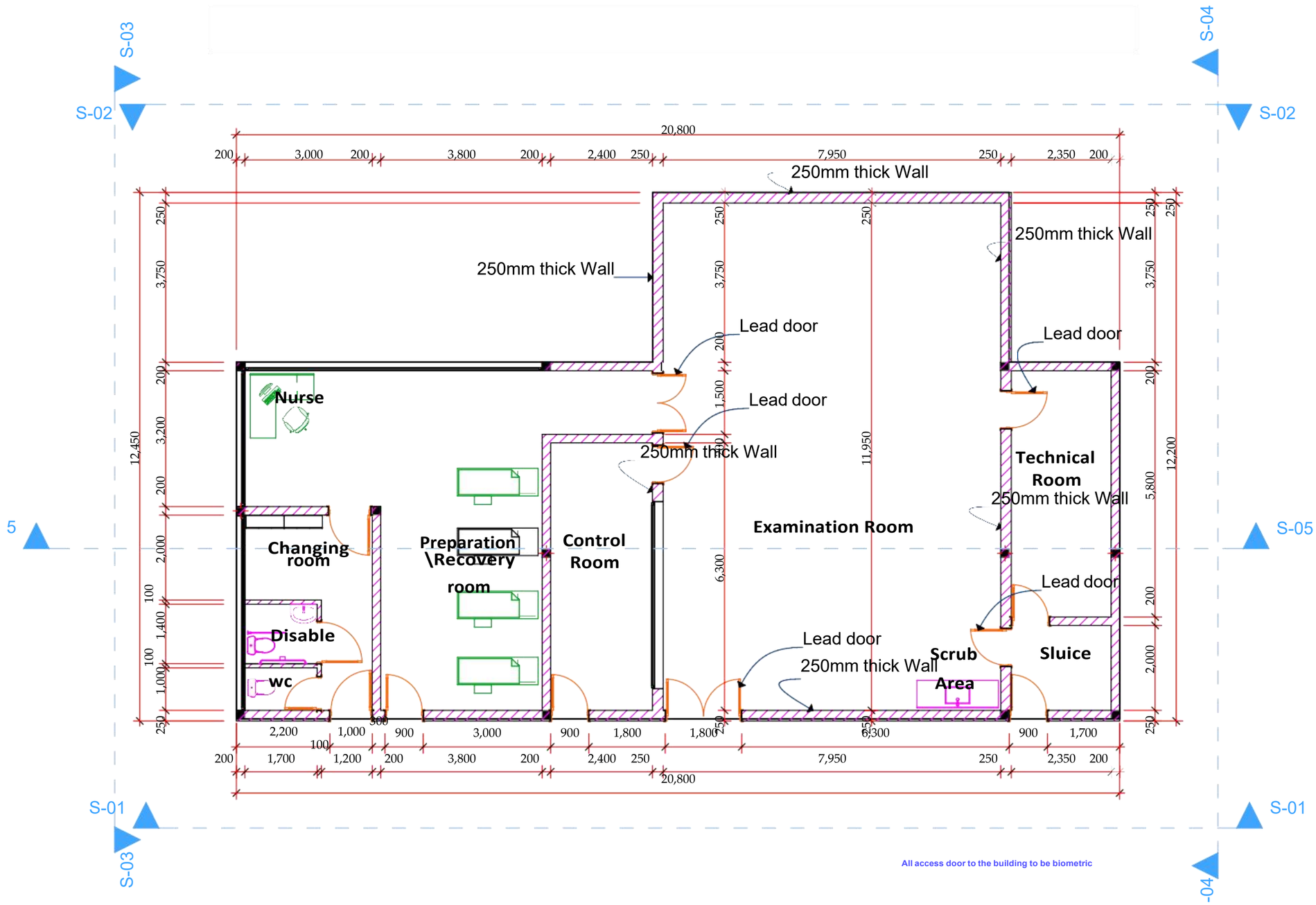

0. RADIOLOGY FLOOR LAYOUT 1:50

NOTES

GENERAL NOTES

1. This drawing is protected under the copyright Act , and cannot be used or reproduced in part or in whole without authors consent.
2. Read only figured dimensions.
3. All construction work is to comply with the latest K.B.S. standard codes of practice, Local Authority By-Laws,and Fire regulations.
4. P.V. denotes permanent ventilation and must be provided above all doors and windows where indicated or shown
5. All walls less than 200mm thick to be reinforced with hoop iron at every alternate course
6. Water Meter to be 300mm above G.L.
7. D.p.c. denotes one layer of bituminous felt to be provided under all walls 150mm above G.L.
8. All R.C. works to structural engineer'sdetails.
9. Provide 1 row of 600x600x50mm precast conc paving slabs around the building unless otherwise shown.
10. Contractors must verify all dimensions and levels on site before commencing work. Any discrepancies must be reported to the architect before work is put in hand.
11. All levels shown are finished levels unless otherwise stated.
12. All surface beds to be cast on well compacted and well consolidated filling.
13. Depth of foundation trenches to be minimum 600mm below reduced ground level.
14. All pipes and services to be minimum 450mm below reduced ground level.

REVISIONS

NO.	DATE	PROJECT	REVISED	APPROVED

PROPOSED PROJECT:

PROPOSED

CLIENT NAME :

TITLE :

LEAD CONSULTANT:

CAD BY :	G A	SIGN:	
SCALE :	As shown	DATE:	11/05/2022
CHECKED BY :	C A	DATE:	

PROJECT No.:	CITY :	LOCATION:	PLOT NO.:	SHEET No.:
	NAIROBI	KENYATTA		

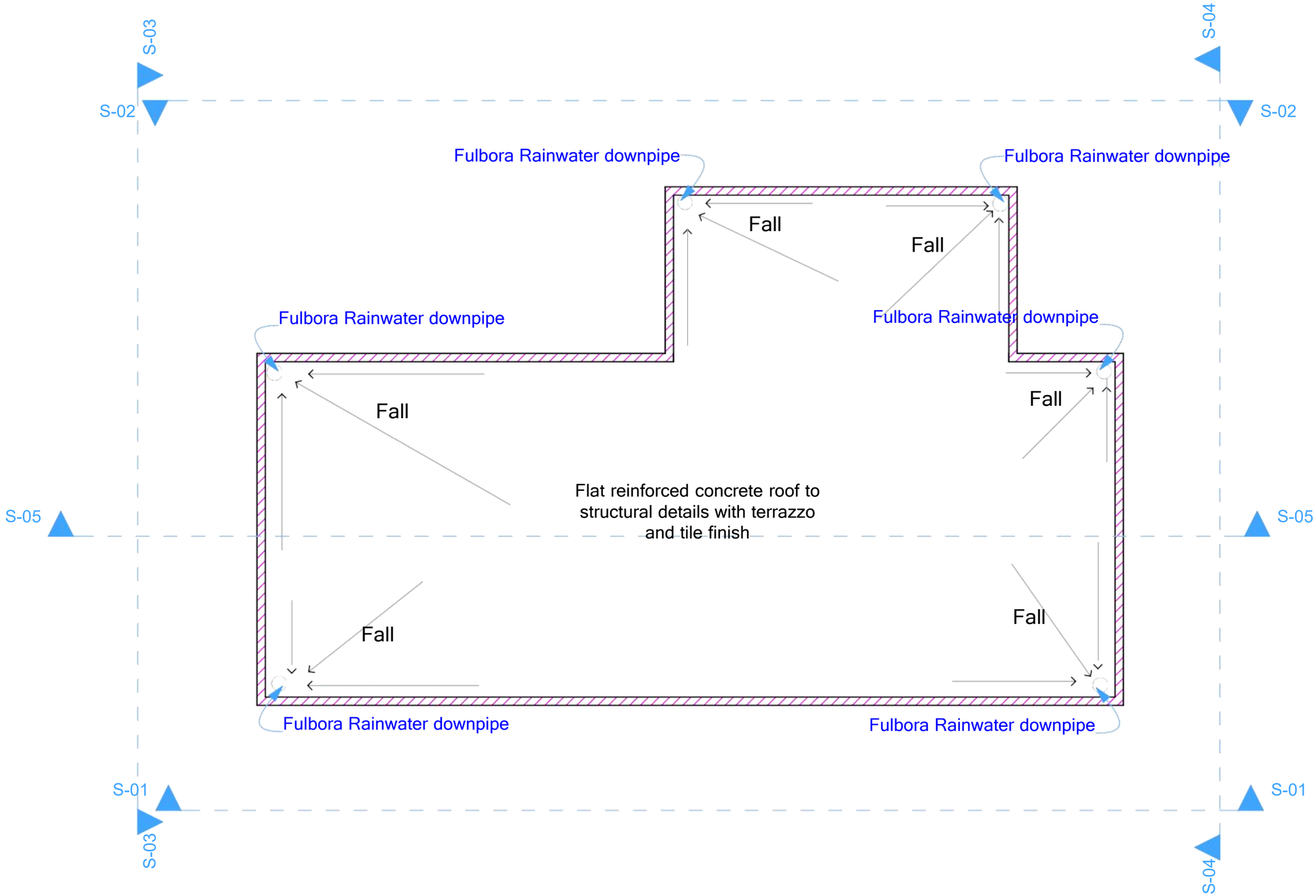

1. ROOF LAYOUT 1:50

NOTES

GENERAL NOTES

1. This drawing is protected under the copyright Act , and cannot be used or reproduced in part or in whole without authors consent.
2. Read only figured dimensions.
3. All construction work is to comply with the latest K.B.S. standard codes of practice, Local Authority By-Laws,and Fire regulations.
4. P.V. denotes permanent ventilation and must be provided above all doors and windows where indicated or shown
5. All walls less than 200mm thick to be reinforced with hoop iron at every alternate course
6. Water Meter to be 300mm above G.L.
7. D.p.c. denotes one layer of bituminous felt to be provided under all walls 150mm above G.L.
8. All R.C. works to structural engineer'sdetails.
9. Provide 1 row of 600x600x50mm precast conc paving slabs around the building unless otherwise shown.
10. Contractors must verify all dimensions and levels on site before commencing work. Any discrepancies must be reported to the architect before work is put in hand.
11. All levels shown are finished levels unless otherwise stated.
12. All surface beds to be cast on well compacted and well consolidated filling.
13. Depth of foundation trenches to be minimum 600mm below reduced ground level.
14. All pipes and services to be minimum 450mm below reduced ground level.

REVISIONS

NO.	DATE	PROJECT	REVISED	APPROVED

PROPOSED PROJECT:

PROPOSED

CLIENT NAME :

TITLE :

LEAD CONSULTANT:

CAD BY :	G A	SIGN:	
SCALE :	As shown	DATE:	11/05/2022
CHECKED BY :	C A	DATE:	

PROJECT No.:	CITY :	LOCATION:	PLOT NO.:	SHEET No.:
	NAIROBI	KENYATTA		

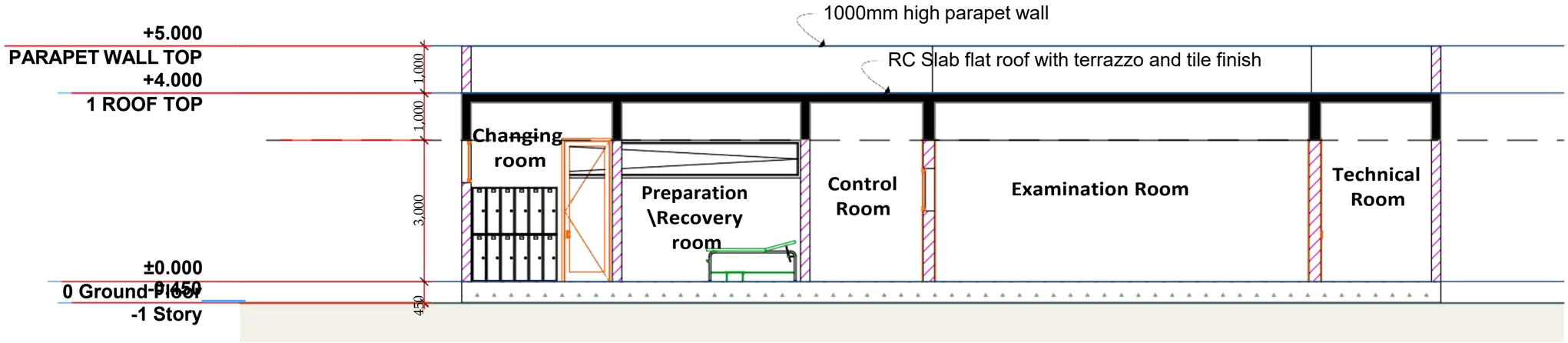

S-05 Building Section (1) 1:50

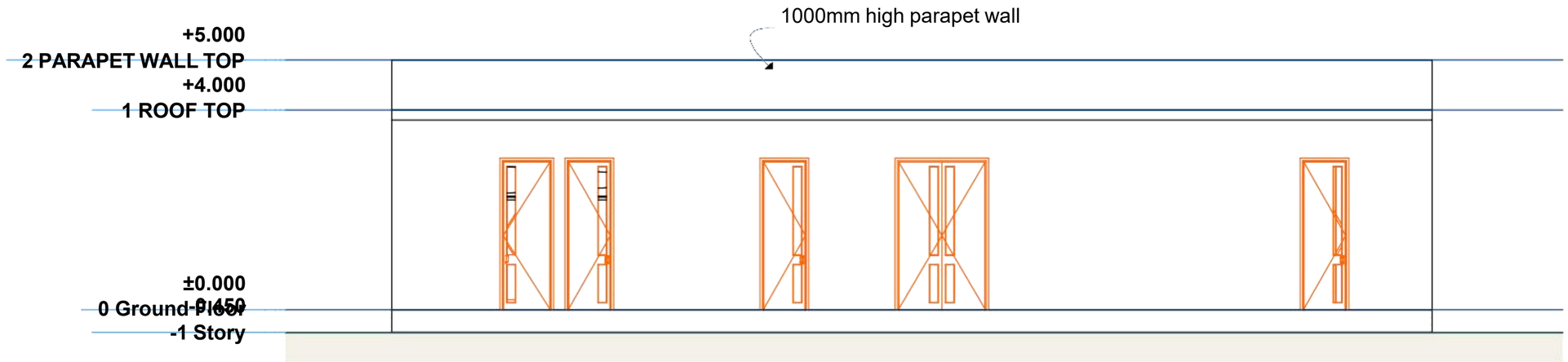

S-01 Building Section (1) 1:50

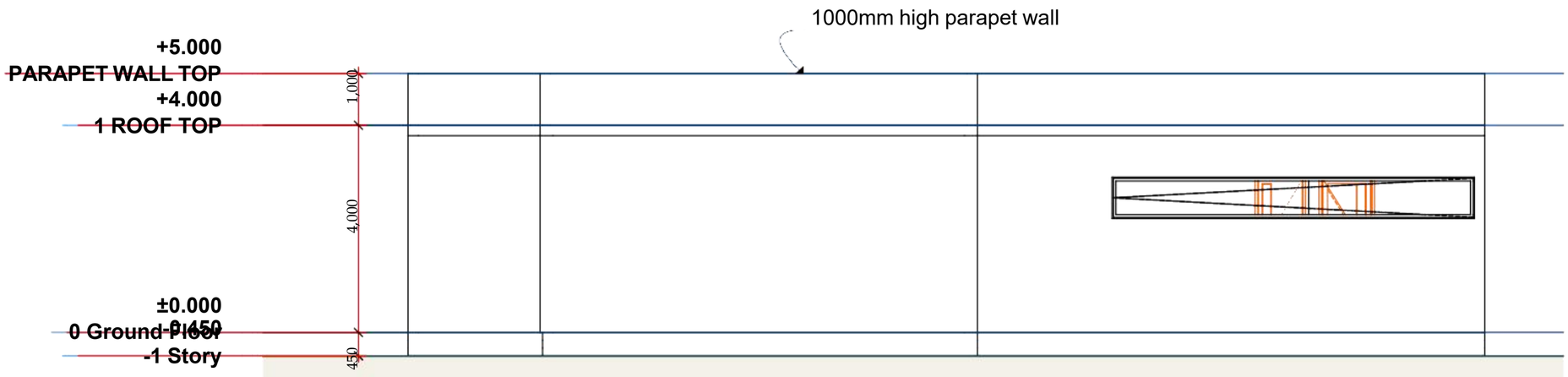

S-02 Building Section 1:50

NOTES

GENERAL NOTES

1. This drawing is protected under the copyright Act , and cannot be used or reproduced in part or in whole without authors consent.
2. Read only figured dimensions.
3. All construction work is to comply with the latest K.B.S. standard codes of practice, Local Authority By-Laws,and Fire regulations.
4. P.V. denotes permanent ventilation and must be provided above all doors and windows where indicated or shown
5. All walls less than 200mm thick to be reinforced with hoop iron at every alternate course
6. Water Meter to be 300mm above G.L.
7. D.p.c. denotes one layer of bituminous felt to be provided under all walls 150mm above G.L.
8. All R.C. works to structural engineer'sdetails.
9. Provide 1 row of 600x600x50mm precast conc paving slabs around the building unless otherwise shown.
10. Contractors must verify all dimensions and levels on site before commencing work. Any discrepancies must be reported to the architect before work is put in hand.
11. All levels shown are finished levels unless otherwise stated.
12. All surface beds to be cast on well compacted and well consolidated filling.
13. Depth of foundation trenches to be minimum 600mm below reduced ground level.
14. All pipes and services to be minimum 450mm below reduced ground level.

REVISIONS

NO.	DATE	PROJECT	REVISED	APPROVED

PROPOSED PROJECT:

PROPOSED

CLIENT NAME :

TITLE :

LEAD CONSULTANT:

CAD BY :	G A	SIGN:	
SCALE :	As shown	DATE:	11/05/2022
CHECKED BY :	C A	DATE:	

PROJECT No.:	CITY :	LOCATION:	PLOT NO.:	SHEET No.:
	NAIROBI	KENYATTA		

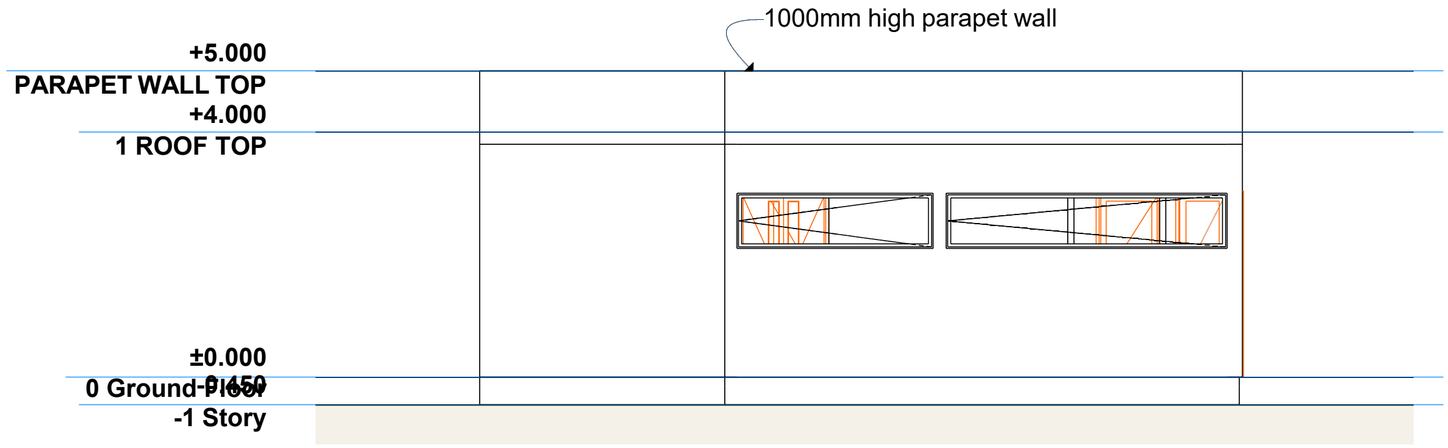

S-03 Building Section 1:50

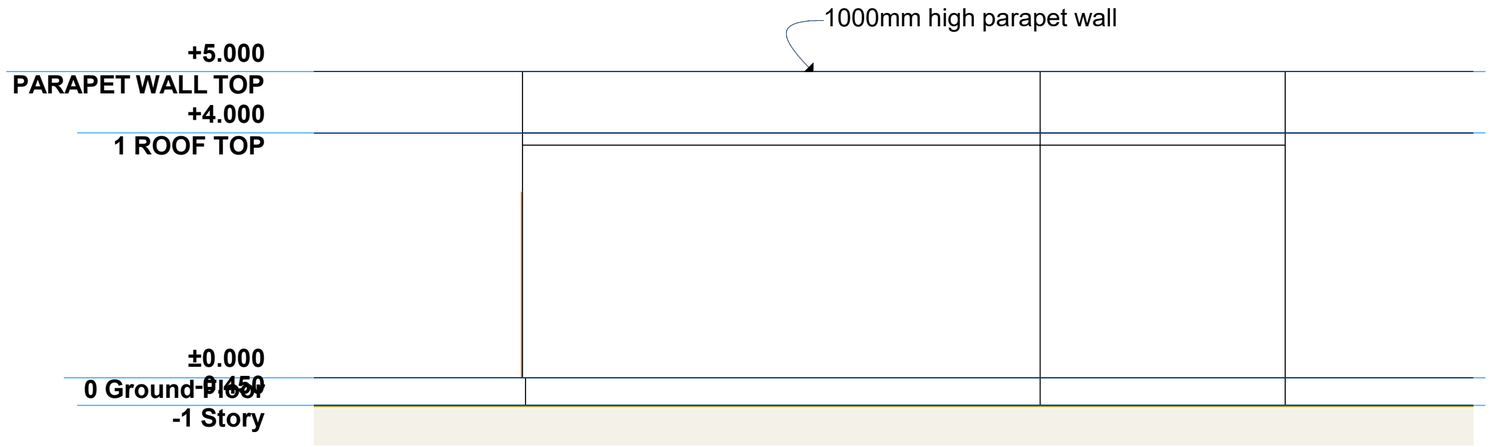

S-04 Building Section 1:50

NOTES

GENERAL NOTES

1. This drawing is protected under the copyright Act , and cannot be used or reproduced in part or in whole without authors consent.
2. Read only figured dimensions.
3. All construction work is to comply with the latest K.B.S. standard codes of practice, Local Authority By-Laws,and Fire regulations.
4. P.V. denotes permanent ventilation and must be provided above all doors and windows where indicated or shown
5. All walls less than 200mm thick to be reinforced with hoop iron at every alternate course
6. Water Meter to be 300mm above G.L.
7. D.p.c. denotes one layer of bituminous felt to be provided under all walls 150mm above G.L.
8. All R.C. works to structural engineer's details.
9. Provide 1 row of 600x600x50mm precast conc paving slabs around the building unless otherwise shown.
10. Contractors must verify all dimensions and levels on site before commencing work. Any discrepancies must be reported to the architect before work is put in hand.
11. All levels shown are finished levels unless otherwise stated.
12. All surface beds to be cast on well compacted and well consolidated filling.
13. Depth of foundation trenches to be minimum 600mm below reduced ground level.
14. All pipes and services to be minimum 450mm below reduced ground level.

REVISIONS

NO.	DATE	PROJECT	REVISED	APPROVED

PROPOSED PROJECT:

PROPOSED

CLIENT NAME :

TITLE :

LEAD CONSULTANT:

CAD BY :	G A	SIGN:	
SCALE :	As shown	DATE:	11/05/2022
CHECKED BY :	C A	DATE:	

PROJECT No.:	CITY :	LOCATION:	PLOT NO.:	SHEET No.:
	NAIROBI	KENYATTA		

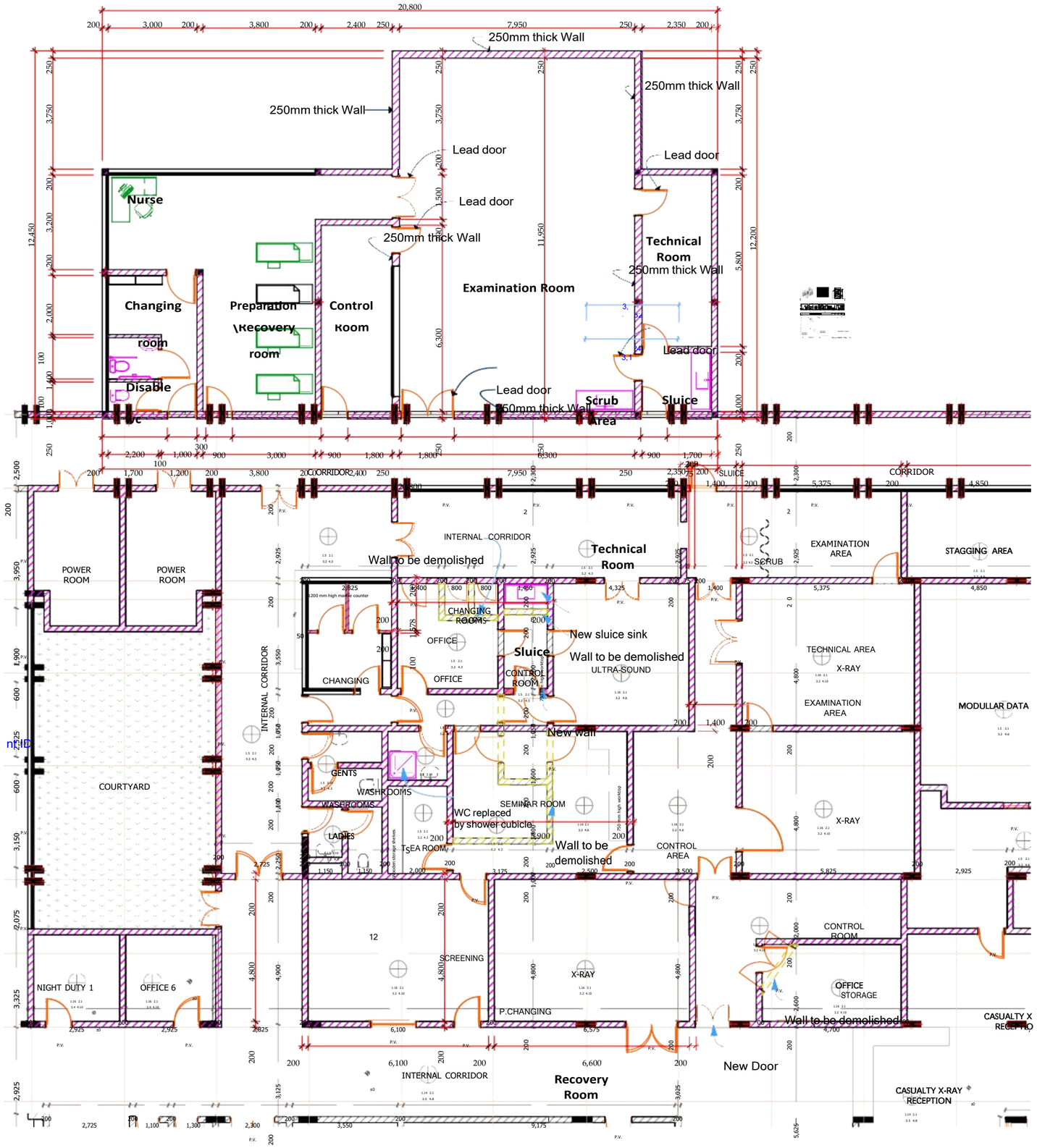

NOTES

GENERAL NOTES

1. This drawing is protected under the copyright Act , and cannot be used or reproduced in part or in whole without authors consent.
2. Read only figured dimensions.
3. All construction work is to comply with the latest K.B.S. standard codes of practice, Local Authority By-Laws,and Fire regulations.
4. P.V. denotes permanent ventilation and must be provided above all doors and windows where indicated or shown
5. All walls less than 200mm thick to be reinforced with hoop iron at every alternate course
6. Water Meter to be 300mm above G.L.
7. D.p.c. denotes one layer of bituminous felt to be provided under all walls 150mm above G.L.
8. All R.C. works to structural engineer's details.
9. Provide 1 row of 600x600x50mm precast conc paving slabs around the building unless otherwise shown.
10. Contractors must verify all dimensions and levels on site before commencing work. Any discrepancies must be reported to the architect before work is put in hand.
11. All levels shown are finished levels unless otherwise stated.
12. All surface beds to be cast on well compacted and well consolidated filling.
13. Depth of foundation trenches to be minimum 600mm below reduced ground level.
14. All pipes and services to be minimum 450mm below reduced ground level.

REVISIONS

NO.	DATE		
PROJECT		REVISED	APPROVED

PROPOSED PROJECT:

PROPOSED

CLIENT NAME :

TITLE :

LEAD CONSULTANT:

CAD BY :	G A	SIGN:	
SCALE :	As shown	DATE:	11/05/2022
CHECKED BY :	C A	DATE:	

PROJECT No.	CITY :	LOCATION:	PLOT NO.:	SHEET No.:
	NAIROBI	KENYATTA		

NOTES

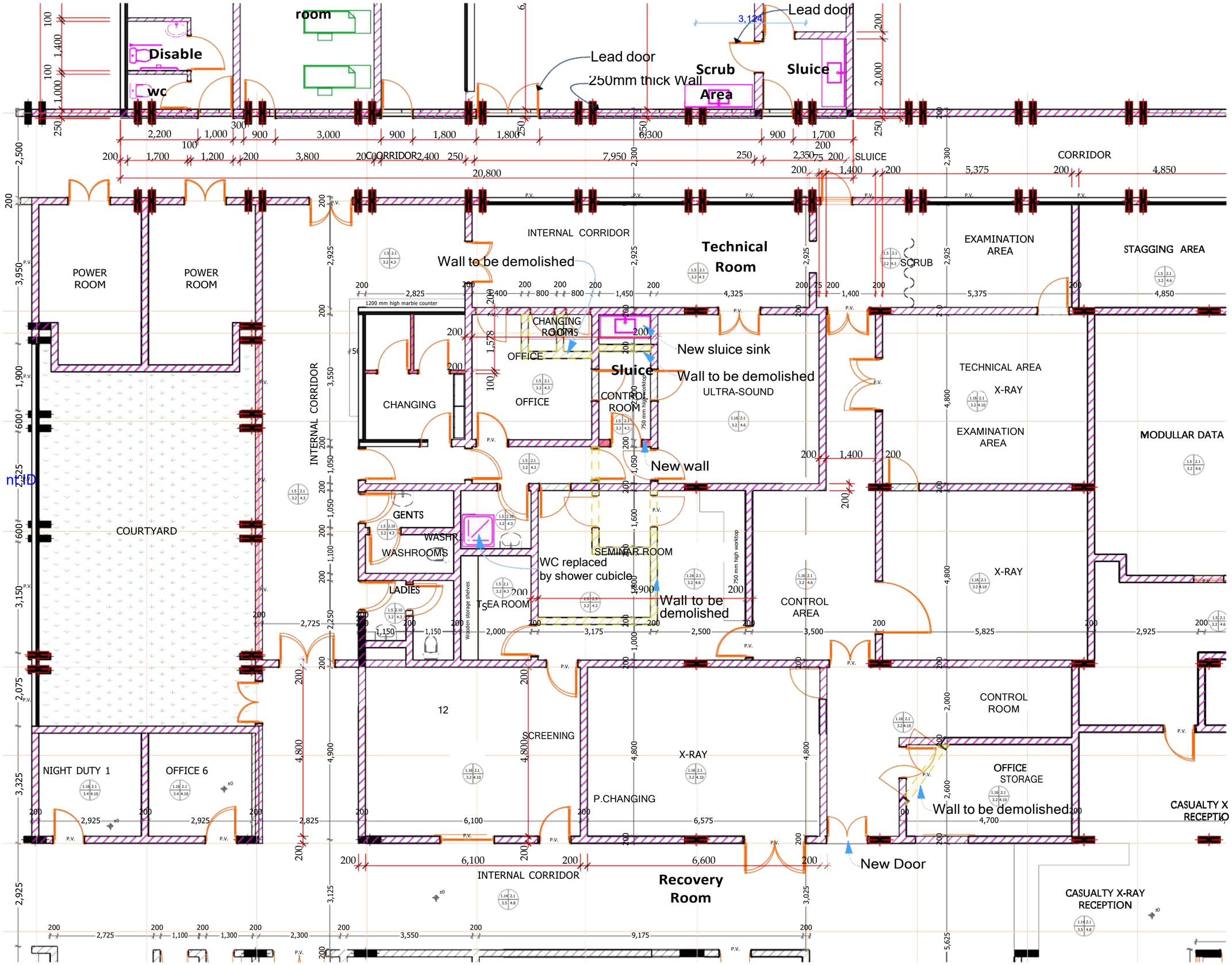

NOTES

GENERAL NOTES

1. This drawing is protected under the copyright Act , and cannot be used or reproduced in part or in whole without authors consent.
2. Read only figured dimensions.
3. All construction work is to comply with the latest K.B.S. standard codes of practice, Local Authority By-Laws,and Fire regulations.
4. P.V. denotes permanent ventilation and must be provided above all doors and windows where indicated or shown
5. All walls less than 200mm thick to be reinforced with hoop iron at every alternate course
6. Water Meter to be 300mm above G.L.
7. D.p.c. denotes one layer of bituminous felt to be provided under all walls 150mm above G.L.
8. All R.C. works to structural engineer's details.
9. Provide 1 row of 600x600x50mm precast conc paving slabs around the building unless otherwise shown.
10. Contractors must verify all dimensions and levels on site before commencing work. Any discrepancies must be reported to the architect before work is put in hand.
11. All levels shown are finished levels unless otherwise stated.
12. All surface beds to be cast on well compacted and well consolidated filling.
13. Depth of foundation trenches to be minimum 600mm below reduced ground level.
14. All pipes and services to be minimum 450mm below reduced ground level.

REVISIONS

NO.	DATE		
PROJECT		REVISED	APPROVED

PROPOSED PROJECT:

PROPOSED

CLIENT NAME :

TITLE :

LEAD CONSULTANT:

CAD BY :	G A	SIGN:	
SCALE :	As shown	DATE:	11/05/2022
CHECKED BY :	C A	DATE:	

PROJECT No.	CITY :	LOCATION:	PLOT NO.:	SHEET No.:
	NAIROBI	KENYATTA		

0. IRA LAYOUT 1:50